THIS DRAWING IS UNPUBLISHED. RELEASED FOR PUBLICATION -,- .
© COPYRIGHT - By - ALL RIGHTS RESERVED.

REVISIONS					
P	LTR	DESCRIPTION	DATE	DWN	APVD
	A5	REVISED PER ECO-17-001765	05MAY2017	SK	AS

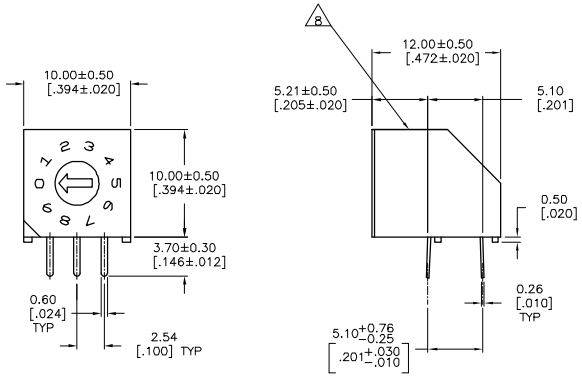

DRD RIGHT ANGLE PC MOUNT

HOW TO ORDER

D R _ – _ _

SERIES
ROTARY DIPS

ACTUATOR STYLE
D= FLUSH
M= MINI PLASTIC SHAFT
W= WHEEL
S= METAL SHAFT

CIRCUIT TYPES
10= BC DECIMAL
10C= BCD COMPLEMENT
16= HEXADECIMAL
16C= HEXADECIMAL COMPLEMENT

TERMINATIONS
BLANK= PC
RAE= RIGHT ANGLE – AUTO ASSEMBLY READY
RA = RIGHT ANGLE

SPECIFICATIONS:

MATERIAL:
FRAME & CASE– PPS UL94V–0, BLACK
ROTOR, PA6T UL94V–0, COLOR SEE P/N TABLE
FIXED CONTACT/TERMINAL– COPPER ALLOY, GOLD FLASH OVER NICKEL PLATE
MOVING CONTACT– COPPER ALLOY, GOLD FLASH OVER NICKEL PLATE
BALL SUPPORT PLATE– COPPER ALLOY
BALL– STAINLESS STEEL
DETENT SPRING– STAINLESS STEEL
BUSHING (DRS)– ZINC DIE CAST
SHAFT (DRS)– COPPER ALLOY– NICKEL PLATE

ELECTRICAL:
CONTACT RATING– 0.4VA@ 20V DC OR PEAK AC
INITIAL CONTACT RESISTANCE– 50 MILLIOHMS MAX
INSULATION RESISTANCE– 1,000 MEGOHMS@100V DC
DIELECTRIC STRENGTH– 300V AC
LIFE EXPECTANCY– 10,000 ROTATIONS

MECHANICAL:
OPERATING FORCE– 13.88 OZF.IN. MAX

ENVIRONMENTAL:
OPERATING TEMPERATURE– –30°C TO +85°C
STORAGE TEMPERATURE– –45°C TO +100°C
RESISTANCE TO SOLDER HEAT–PER 109–202, COND B (THRU–HOLE)
SOLDERABILITY–PER JIS C 0050 & JIS C 0053

NOTES:

1. ALL MATERIALS AND FINISHES SHALL COMPLY WITH EU DIRECTIVE 2002/95/EC OF 27JAN2003 (ROHS)
2. COMMON TERMINALS ARE CONNECTED INTERNALLY, EXCEPT ON HYBRID VERSIONS.
3. RED ROTOR WITH WHITE PRINTING ON TOP AND SIDE OF SWITCH. "S" STYLES HAVE NOT PRINTING ON TOP.
4. BLACK ROTOR WITH WHITE PRINTING ON TOP AND SIDE OF SWITCH. "S" STYLES HAVE NO PRINTING ON TOP.
5. ORANGE ROTOR WITH WHITE PRINTING ON TOP AND SIDE OF SWITCH "S" STYLES HAVE NO PRINTING ON TOP.
6. WHITE ROTOR WITH WHITE PRINTING ON TOP AND SIDE OF SWITCH "S" STYLE HAVE NO PRINTING ON TOP.

△7 LOCATE 'ALCO' TRADE NAME AND LOT NUMBER MARKING. LOT NUMBER TO BE MARKED AS FOLLOW:

4	F
1ST DIGIT	2ND DIGIT
YEAR 1194	MONTH 6

MARK WITH PERMANENT WHITE INK.

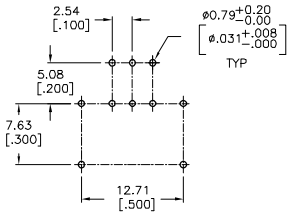

"S" STYLE

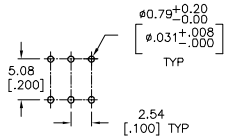

MINI SHAFT FLUSH WHEEL

PRINTED CIRCUIT BOARD LAYOUTS

	BLACK	DRW16RAE04	1–1825008–6
	WHITE	DRW16CRAE04	1–1825008–5
	RED	DRW10RAE04	1–1825008–4
OBSOLETE	~~ORANGE~~	~~DRW10CRAE04~~	~~1–1825008–3~~
	N/A	DRS16RA04	1–1825008–2
	N/A	DRS16CRA04	1–1825008–1
	N/A	DRS10RA04	1–1825008–0
OBSOLETE	~~N/A~~	~~DRS10CRAE04~~	~~1825008–9~~
	BLACK	DRM16RAE04	1825008–8
OBSOLETE	~~WHITE~~	~~DRM16CRAE04~~	~~1825008–7~~
	RED	DRM10RAE04	1825008–6
OBSOLETE	~~ORANGE~~	~~DRM10CRAE04~~	~~1825008–5~~
	BLACK	DRD16RAE04	1825008–4
	WHITE	DRD16CRAE04	1825008–3
	RED	DRD10RAE04	1825008–2
OBSOLETE	~~ORANGE~~	~~DRD10CRAE04~~	~~1825008–1~~
	ROTOR COLOR	T&B P/N	PART NO.

THIS DRAWING IS A CONTROLLED DOCUMENT.

DIMENSIONS: mm [INCHES]

TOLERANCES UNLESS OTHERWISE SPECIFIED:
0 PLC ± –
1 PLC ± –
2 PLC ± 0.25
3 PLC ± –
4 PLC ± –
ANGLES ± 1°

MATERIAL –
FINISH –

DWN B.S.VISWESWARA 17MAY2006
CHK M.S.SARVER –
APVD –
PRODUCT SPEC –
APPLICATION SPEC –
WEIGHT 0

TE Connectivity

NAME DR***RA SERIES ROTARY DIP SWITCH

SIZE	CAGE CODE	DRAWING NO	RESTRICTED TO
A1	00779	C-1825008	–

CUSTOMER DRAWING SCALE 4:1 SHEET 1 OF 2 REV A5

4805 (1/15)

THIS DRAWING IS UNPUBLISHED. RELEASED FOR PUBLICATION -,- .
© COPYRIGHT - By - ALL RIGHTS RESERVED.

REVISIONS

P	LTR	DESCRIPTION	DATE	DWN	APVD
	–	SEE SHEET 1	–	–	–

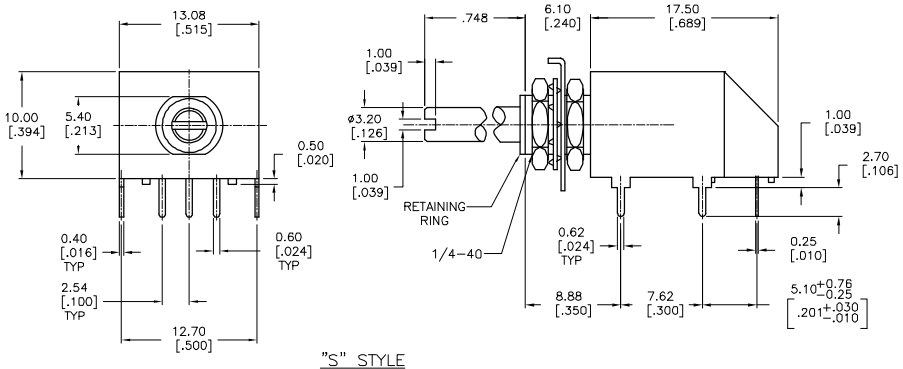

"S" STYLE

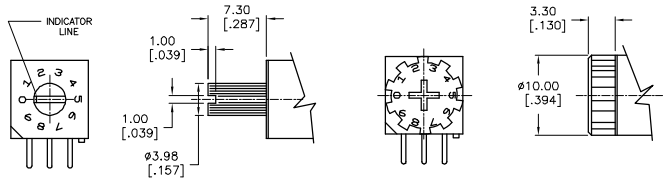

MINI SHAFT
'M' STYLE

WHEEL
'W' STYLE

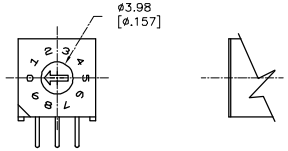

'D' STYLE

TERMINAL IDENTIFICATION FOR DR SERIES ONLY
(VIEWED FROM BOTTOM OF SWITCH)

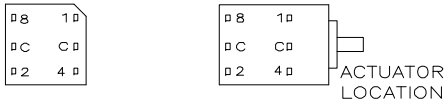

ACTUATORS
SCALE:3:1

10–POSITION, BCD SEE NOTE 3

POS	0	1	2	3	4	5	6	7	8	9
C	X	X	X	X	X	X	X	X	X	X
1		X		X		X		X		X
2			X	X			X	X		
4					X	X	X	X		
8									X	X

16–POSITION, HEXADECIMAL SEE NOTE 4

POS	0	1	2	3	4	5	6	7	8	9	A	B	C	D	E	F
C	X	X	X	X	X	X	X	X	X	X	X	X	X	X	X	X
1		X		X		X		X		X		X		X		X
2			X	X			X	X			X	X			X	X
4					X	X	X	X					X	X	X	X
8									X	X	X	X	X	X	X	X

10 POSITION,
BCD COMPLEMENT SEE NOTE 5

POS	0	1	2	3	4	5	6	7	8	9
$\overline{C}$	X	X	X	X	X	X	X	X	X	X
$\overline{1}$	X		X		X		X		X	
$\overline{2}$	X	X			X	X			X	X
$\overline{4}$	X	X	X	X					X	X
$\overline{8}$	X	X	X	X	X	X	X	X		

16–POSITION,
HEXADECIMAL COMPLEMENT SEE NOTE 6

POS	0	1	2	3	4	5	6	7	8	9	A	B	C	D	E	F
$\overline{C}$	X	X	X	X	X	X	X	X	X	X	X	X	X	X	X	X
$\overline{1}$	X		X		X		X		X		X		X		X	
$\overline{2}$	X	X			X	X			X	X			X	X		
$\overline{4}$	X	X	X	X					X	X	X	X				
$\overline{8}$	X	X	X	X	X	X	X	X								

THIS DRAWING IS A CONTROLLED DOCUMENT.

DIMENSIONS: mm [INCHES]

TOLERANCES UNLESS OTHERWISE SPECIFIED:
0 PLC ± –
1 PLC ± –
2 PLC ± 0.25
3 PLC ± –
4 PLC ± –
ANGLES ± 1°

MATERIAL –
FINISH –

DWN 17MAY2006 B.S.VISWESWARA
CHK M.S.SARVER
APVD –
PRODUCT SPEC –
APPLICATION SPEC –
WEIGHT 0

TE Connectivity

NAME DR***RA SERIES ROTARY DIP SWITCH –

SIZE	CAGE CODE	DRAWING NO	RESTRICTED TO
A1	00779	C-1825008	–

CUSTOMER DRAWING SCALE 4:1 SHEET 2 OF 2 REV A5

4805 (1/15)